SPL-300X300x-C40

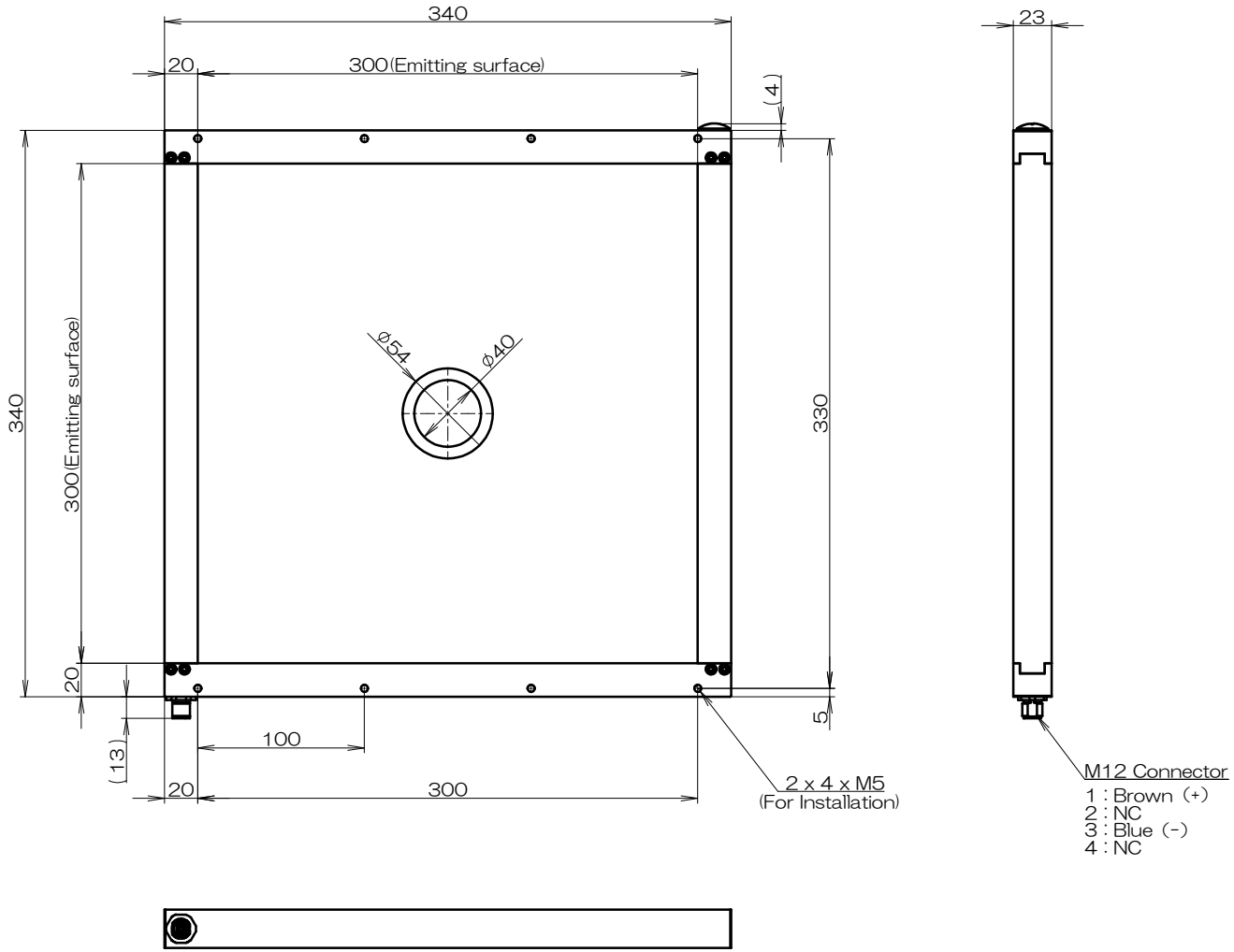

Copyright(C) 2015 CCS Asia PTE LTD. All rights reserved.
Reproduction or photocopy without permission is prohibited.

Input Voltage: DC24V
Power Consumption: 46W